Compak
COFFEE GRINDERS

ORIGINAL
SPARE PARTS

K-3
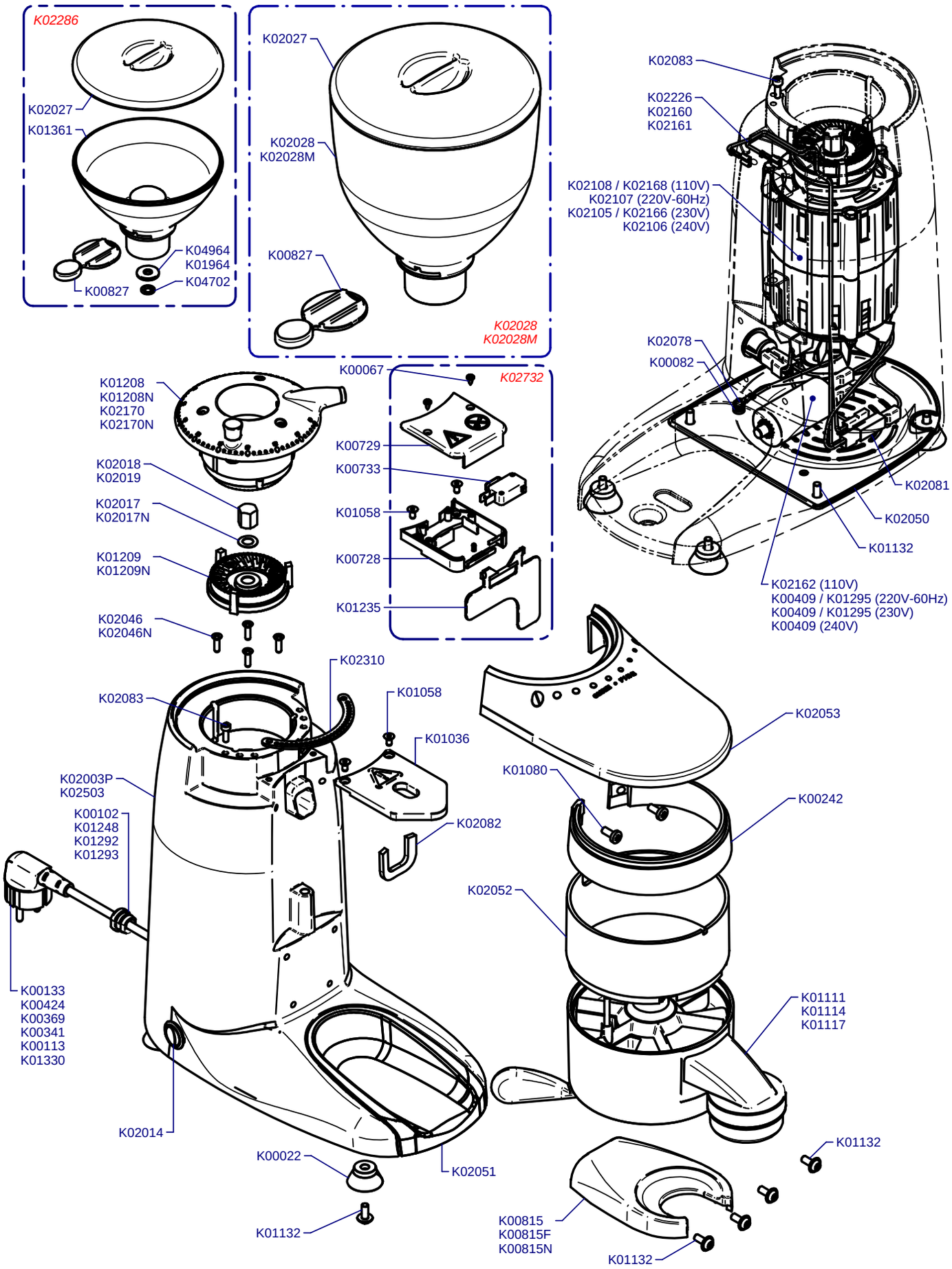
Updated 14/07/2008