Compak
COFFEE GRINDERS

ORIGINAL
SPARE PARTS

K-5 / K-6 / K-6 Telescopic
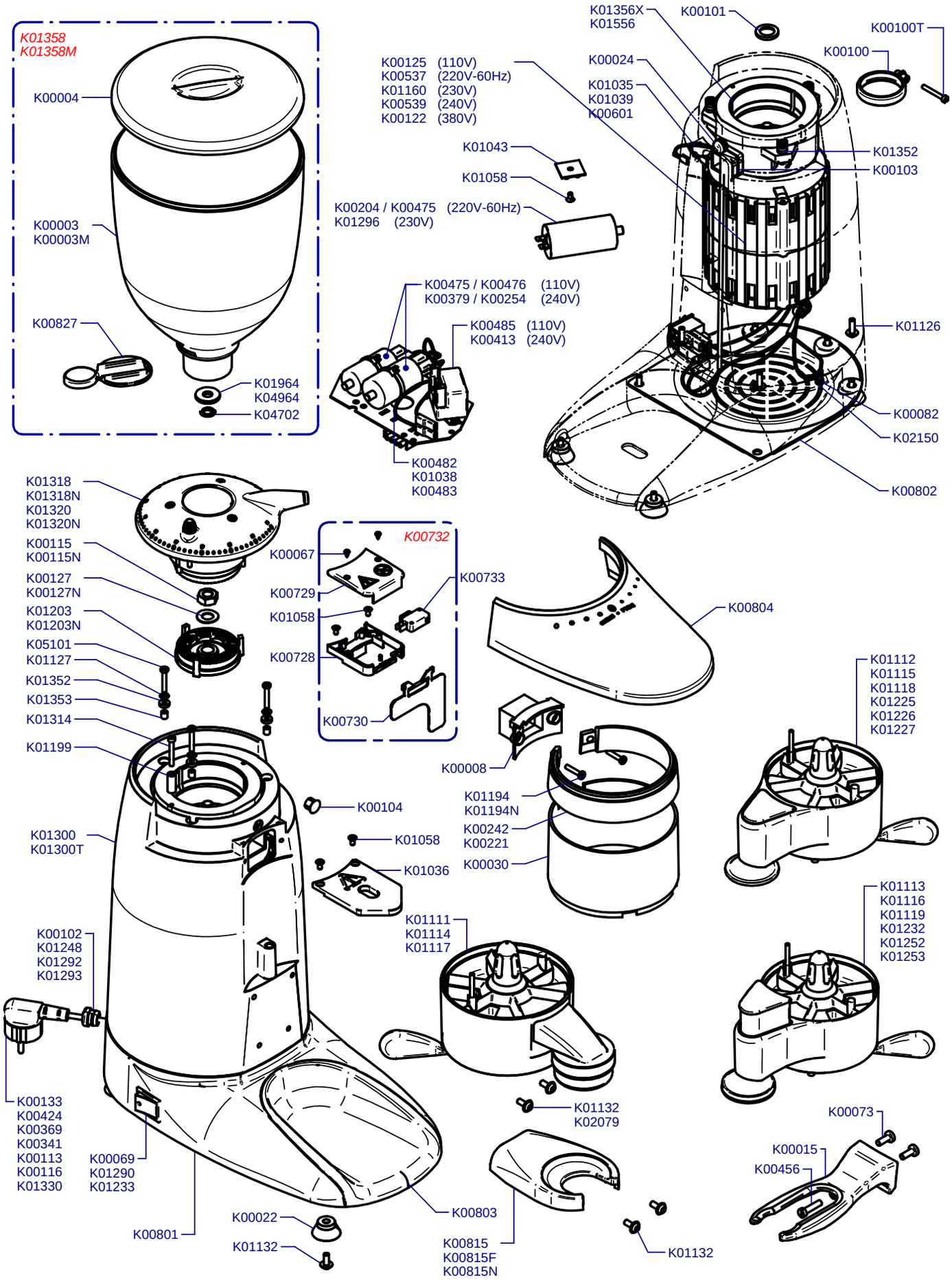
Updated 14/07/2008