Compak
COFFEE GRINDERS

ORIGINAL
SPARE PARTS

K-6 Barista
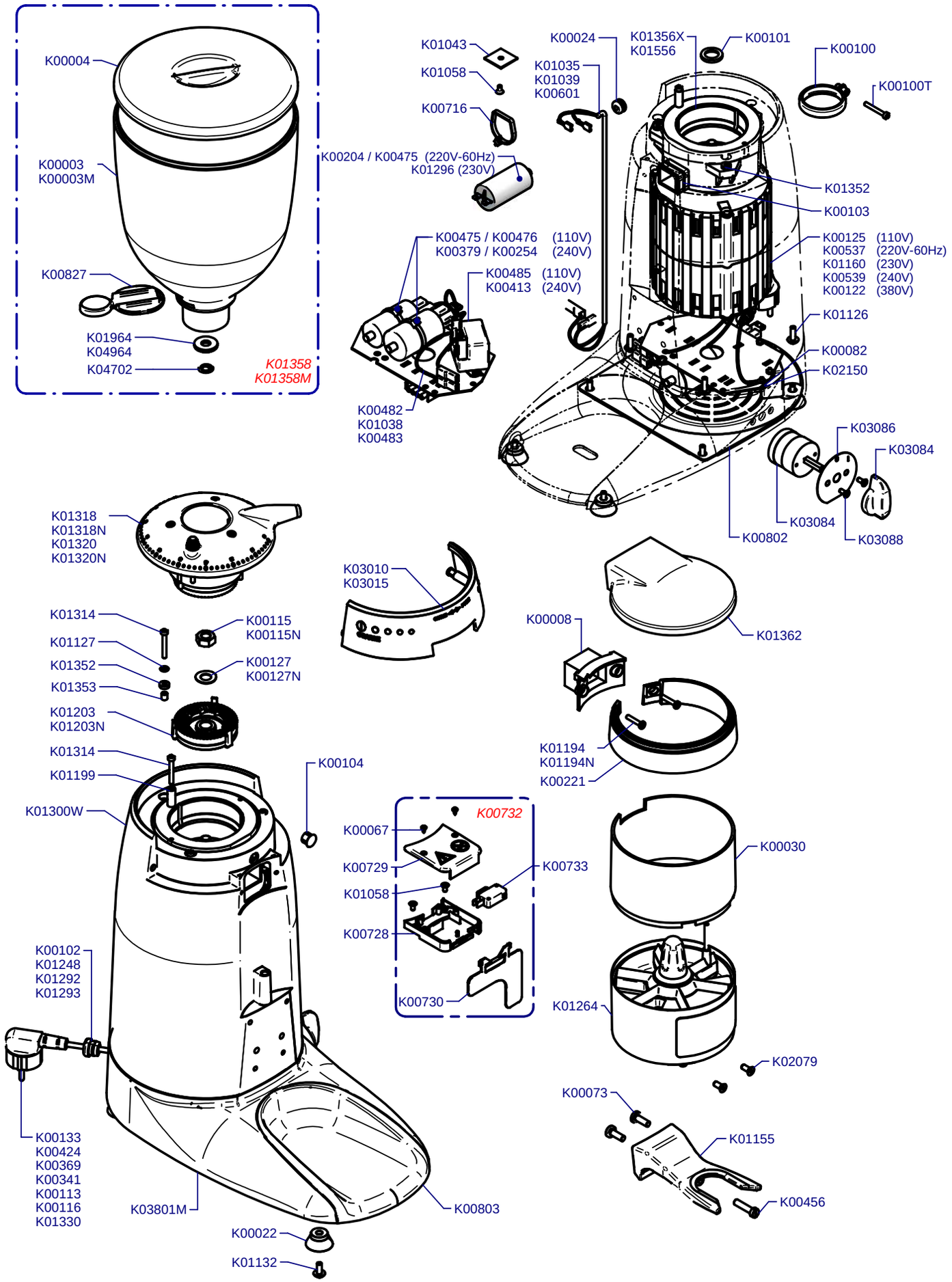
Updated 14/07/2008