Compak
COFFEE GRINDERS

ORIGINAL
SPARE PARTS

K-6 Silenzio / K-6 Silenzio Telescopic
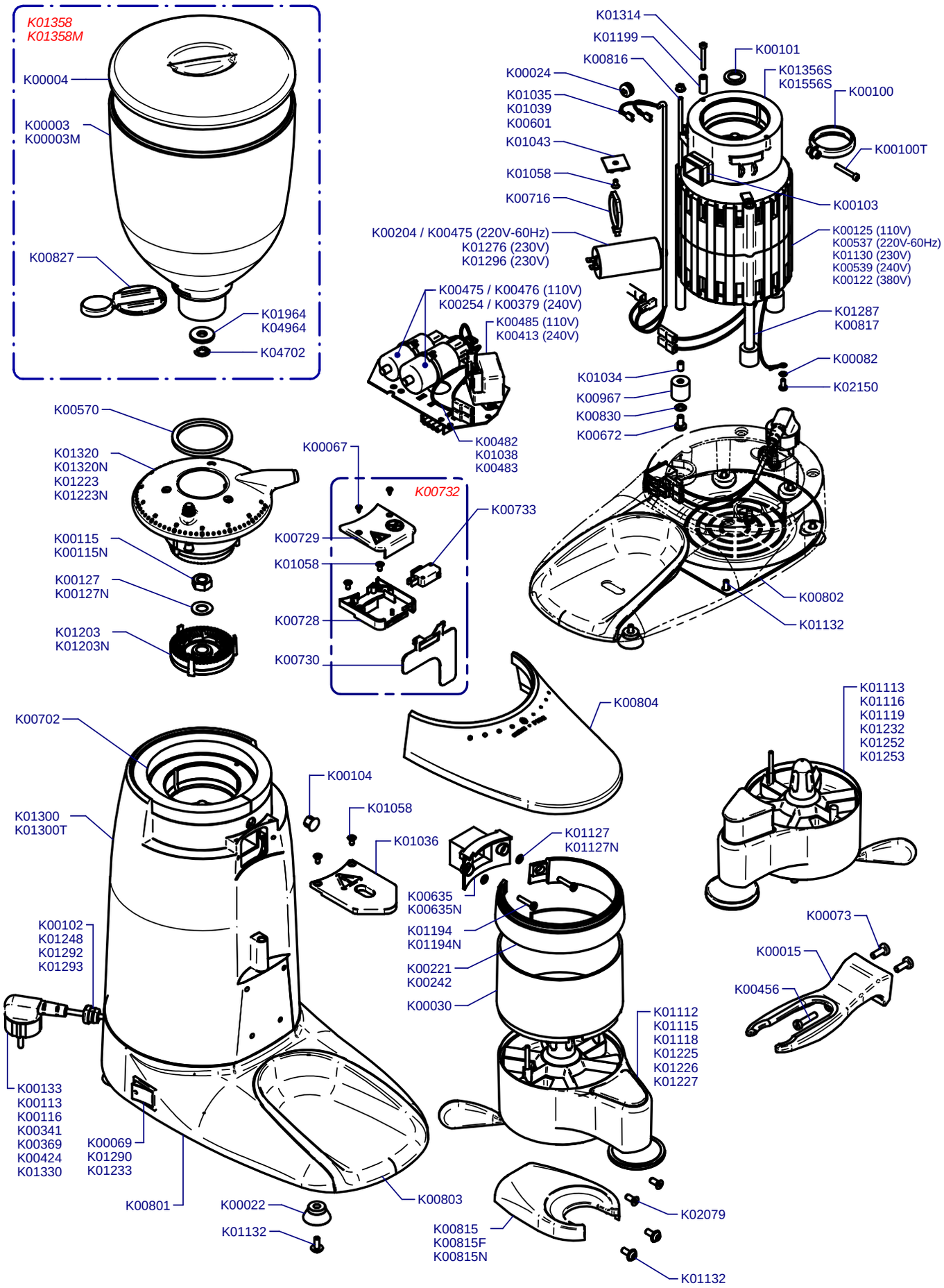
Updated 14/07/2008