Compak
COFFEE GRINDERS

ORIGINAL
SPARE PARTS

K-3 Elite
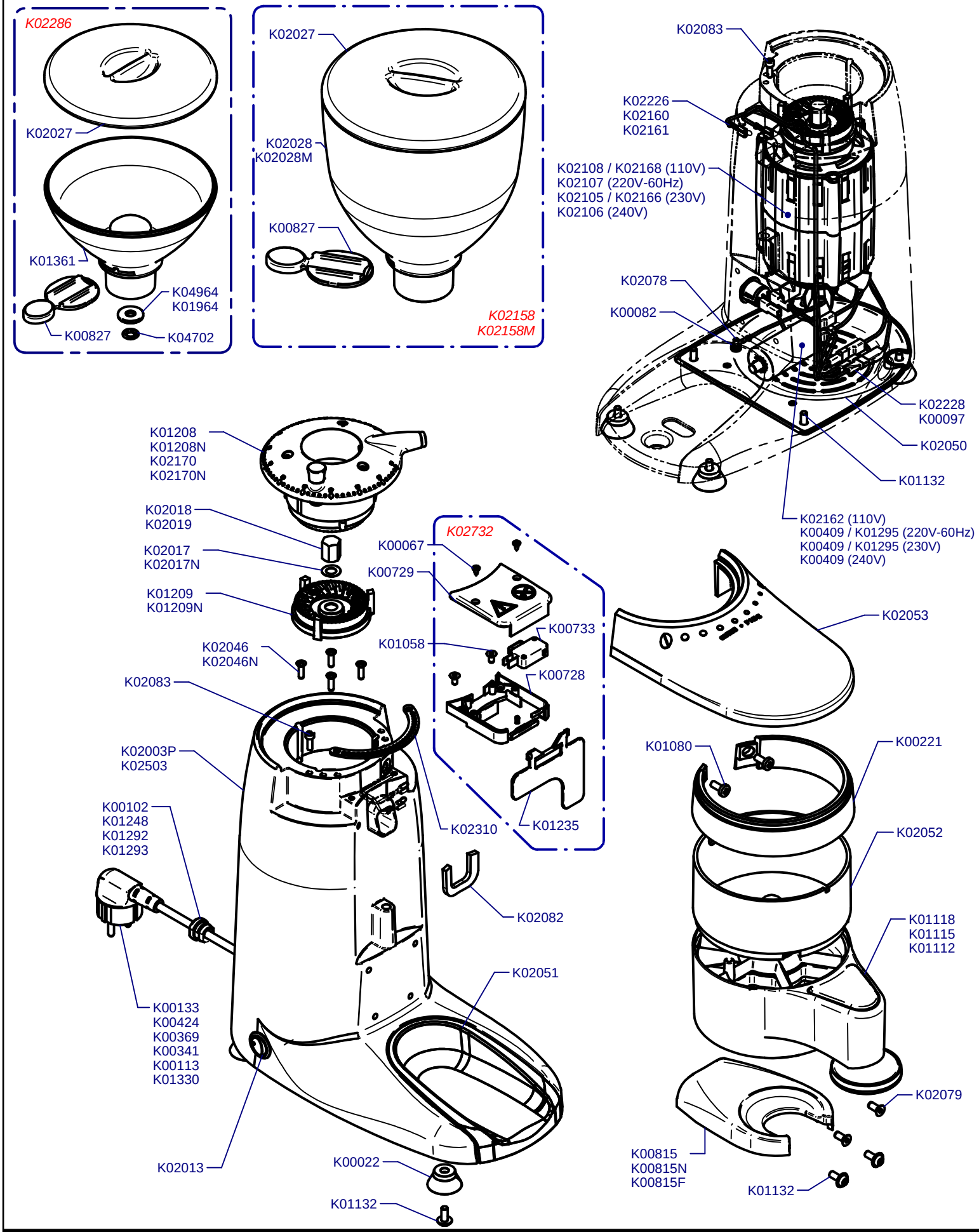
Updated 26/01/2010